DEC Axis Assembly

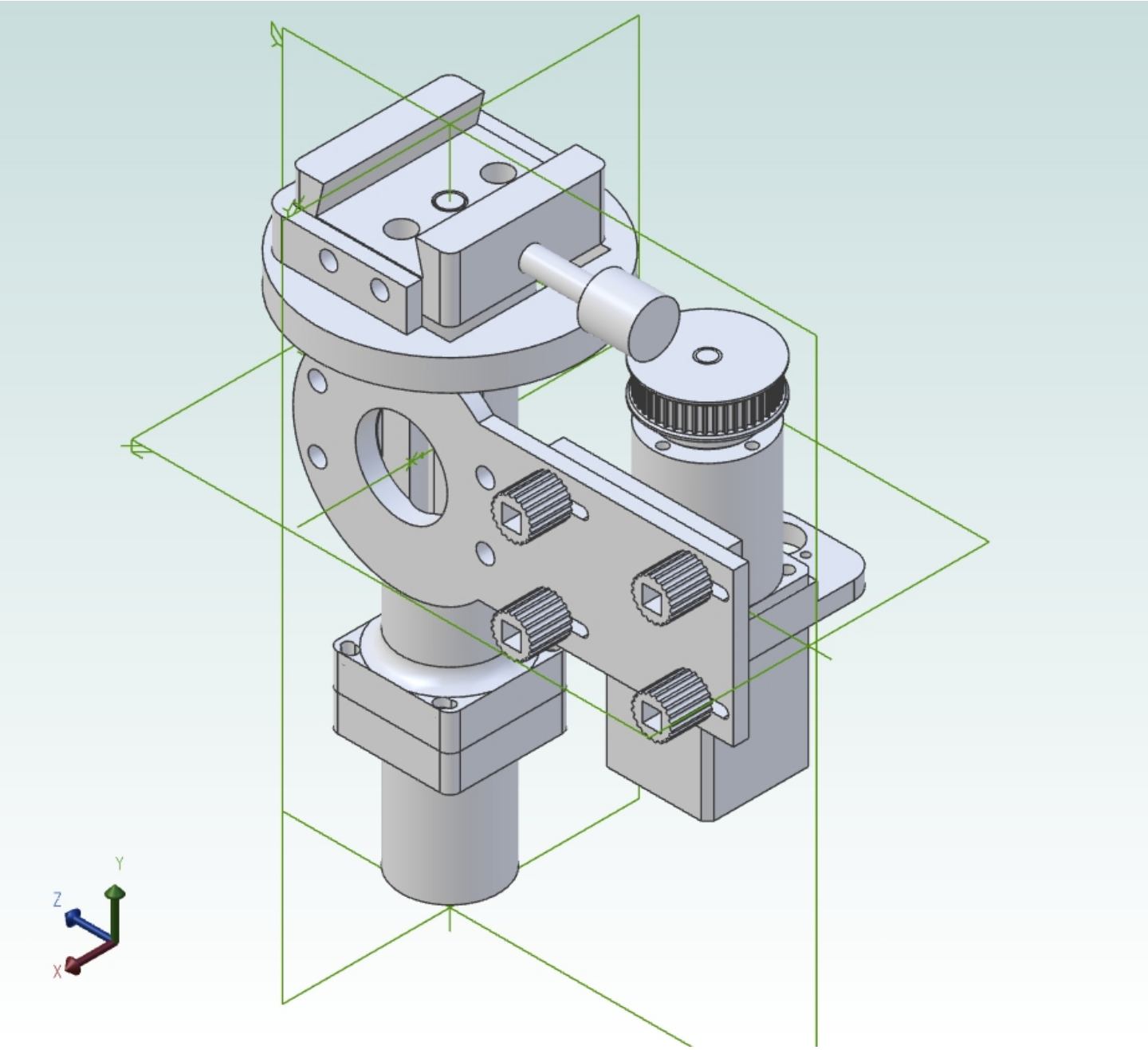

For EQM35 Mount